REV.	DESCRIPTION	DATE
1	RELEASE	Nov 11, 2011
A	N13'05027	May 13, 2013

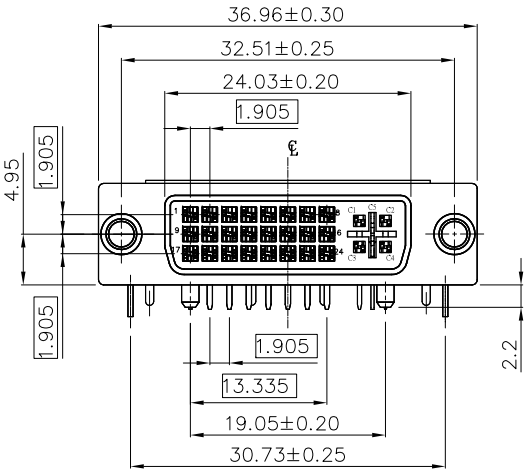

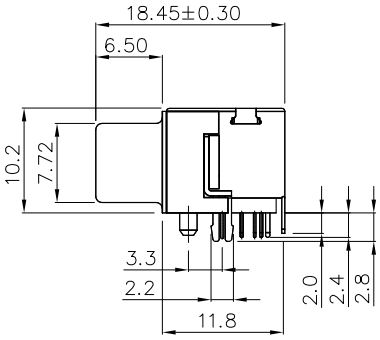

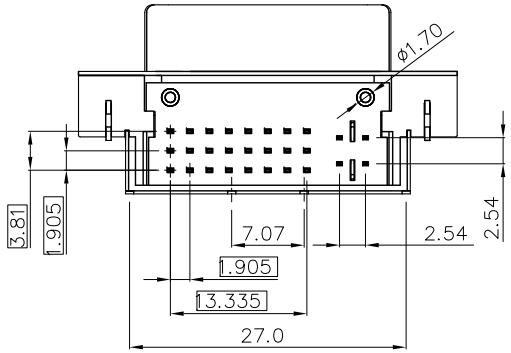

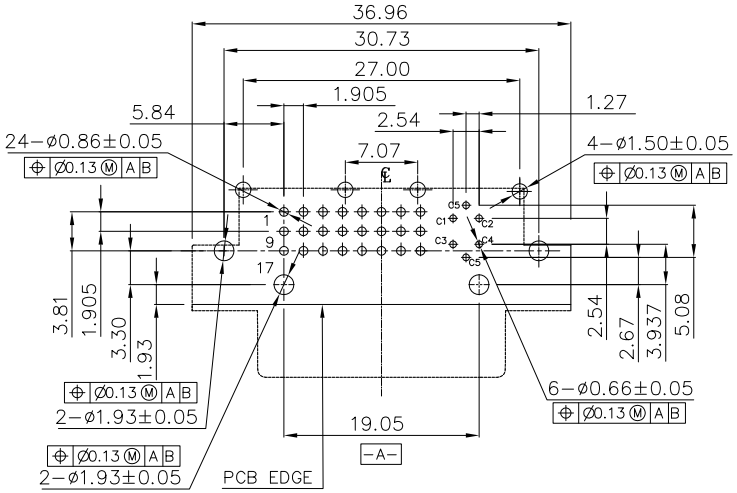

RECOMMEND PCB LAYOUT
TOLERANCE: ±0.05
TOP VIEW

MATERIALS

1. HOUSING: THERMOPLASTIC (UL 94V−0).
2. COVER: THERMOPLASTIC (UL 94V−0).
3. TERMINAL: COPPER ALLOY,
   PLATING: GOLD PLATED ON CONTACT AREA,
   TIN PLATED ON SOLDER TAILS,
   NICKEL UNDER PLATED OVERALL.
4. BOARD LOCK: COPPER ALLOY, TIN PLATED OVER NICKEL.
5. SHELL: SPCC, NICKEL PLATED OVERALL.
6. RIVET: Zn ALLOY, NICKEL PLATED OVERALL.

SPECIFICATION

1. MATING FORCE: 4.5KG/MAX.
2. UNMATING FORCE: 1.0−4.0KG.
3. DIELECTRIC WITHSTANDING VOLTAGE:
   500V AC R.M.S. FOR ONE MINUTE.
4. INSULATION RESISTANCE:
   1000MΩ MIN AT 500V DC.
5. CONTACT RESISTANCE: 30mΩ MAX.
6. OPERATING TEMPERATURE : −25°C TO +85°C.

256F029-XNX02D-R

- SERIES CODE
- DIP 90°
- FEMALE
- NUMBER OF POSITIONS
- RoHS
- FOLLOW NUMBER
- 0: BLACK
- F: BEIGE
- SHELL: NICKEL PLATED
- PLATING SEE TABLE

DESCRIPTION OF PLATING ON TERMINALS			
NO.	EXPLAIN	NO.	EXPLAIN
0	GOLD FLASH	3	GOLD 15u"
6	GOLD 30u"		

TOLERANCE .0=±0.25 .00=±0.15 .000=±0.05 ANG.=±3°	DRAWER W2JN CHECK Stony APP'D LIJON	Astron ASTRON TECHNOLOGY CORP.
UNITS : mm	PRODUCT SPEC. —	NAME DVI FEMALE 29P DIP TYPE WITH BACK SHELL
SCALE NONE / SIZE A5 / SHEET 1 OF 1 / REV. A		DRAW NO. R256F029−XN0/F02D−R

DRAWING NAME: R