REV.	DESCRIPTION	DATE
A	N15'10022	Oct 30, 2015
B	N15'12014	Dec 25, 2015
C	N17'05001	May 04, 2017

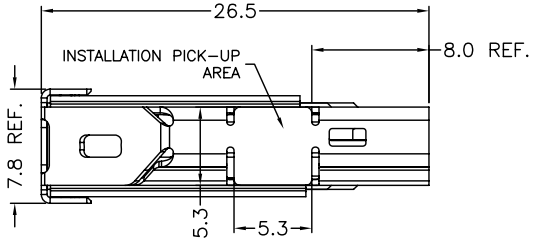

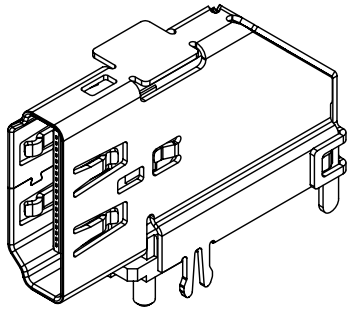

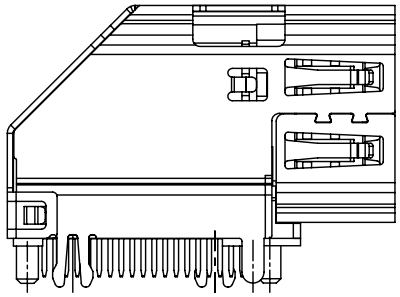

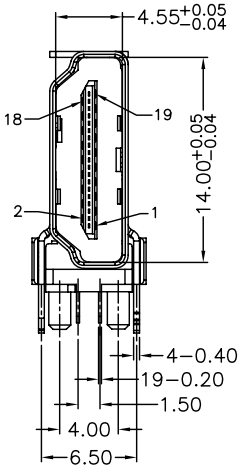

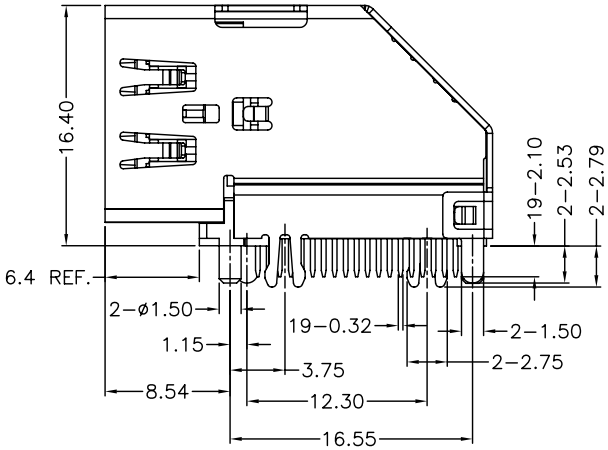

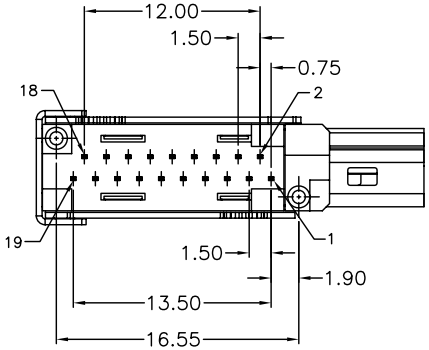

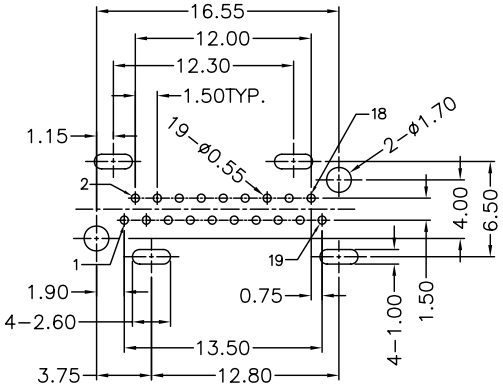

RECOMMEND P.C.B LAYOUT
TOP VIEW

MATERIALS

1. HOUSING : L.C.P (UL 94V−0), BLACK.
2. TERMINAL : BRASS, (t=0.20mm)
   GOLD PLATED ON CONTACT AREA,
   TIN PLATED ON SOLDER TAIL,
   UNDER NICKEL PLATED OVER ALL.
3. SHELL : STAINLESS STEEL,(t=0.40mm),NICKEL PLATING.

SPECIFICATION

1. CURRENT RATING : 0.5 A MAX.
2. DIELECTRIC WITHSTANDING VOLTAGE :
   500V AC R.M.S. FOR ONE MINUTE.
3. CONTACT RESISTANCE : 30mΩ MAX.
4. INSULATION RESISTANCE :
   100 MΩ MIN. AT 500V DC.
5. OPERATING TEMPERATURE : −25°C TO +85°C.
6. MATING FORCE : 4.5kgf MAX. (B)
7. UNMATING FORCE : 1.0~4.0kgf (B)
8. DURABILITY : 10000 CYCLES. (B)

PART NUMBER INFORMATION

365FA19−XN601T−H

- SERIES CODE
- DIP
- FEMALE
- A TYPE
- NUMBER OF POSITIONS
- CONTACT PLATING OPTIONS
  - 0 : GOLD FLASH
  - 3 : 15u" GOLD
  - 6 : 30u" GOLD
- VARIATION CODE
- (C) H: HALOGEN FREE

TOLERANCE .0=±.0.30 .00=±0.20 .000=±.XXX .0000=±. ANG.=±3°	DRAWER Duan		Astron WWW.ASTRON.COM.TW
	CHECK Stony		
	APP'D Stony		NAME HDMI CONNECTOR A TYPE, UPRIGHT TYPE
UNITS : mm	PRODUCT SPEC. —		
			DRAW NO. 365FA19−XN601T−H
SCALE NONE / SIZE A4	SHEET 1 OF 1	REV. C	08031

REV.	DESCRIPTION	DATE
A	NEW RELEASE	Oct 25,2015

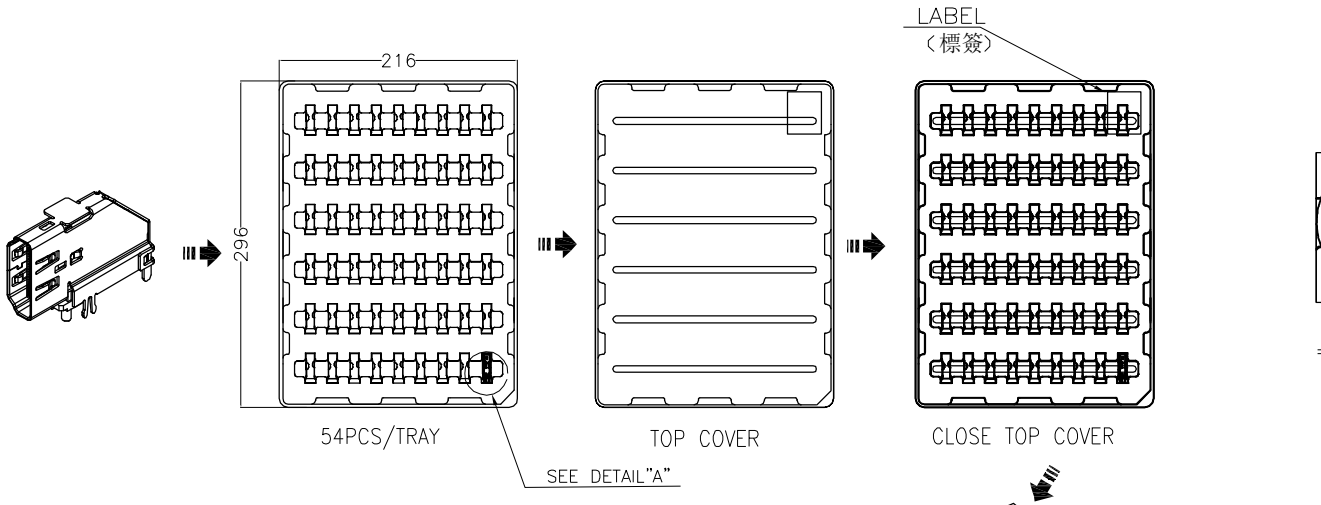

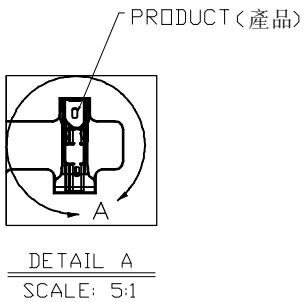

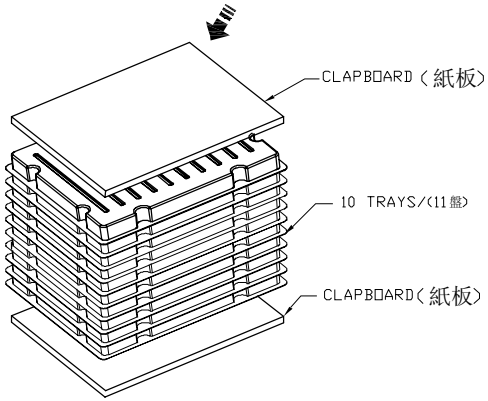

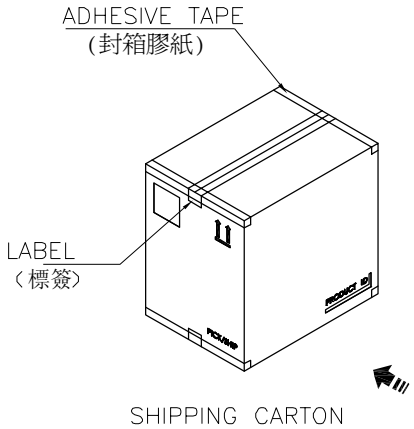

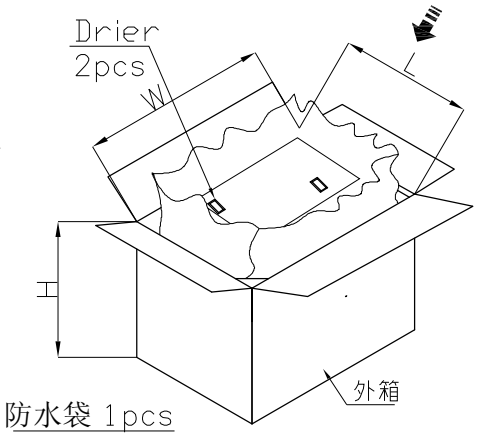

NOTES:

1.DIMENSION:

CARTON:350X270X280mm,K=K.(1PCS)

TRAY(TOP/BOTTOM):296X216X22.5mm (20pcs)

CLAP BOARD:296X216X22.5mm (2pcs)

PROOFWATER BAG:700X550X0.1mm (1pcs)

2.QUANTITY:

54PCS/TRAY

10TRAYS/SHIPPING CARTON

540PCS/SHIPPING CARTON

TOLERANCE .0=±0.38 .00=±0.25 .000=±0.10 .0000=±. ANG.=±3°	DRAWER lu CHECK stony APP'D stony		Astron WWW.ASTRON.COM
	PRODUCT SPEC. —		NAME HDMI A TYPE,UPRIGHT TYPE
UNITS : mm	T-1195		DRAW NO 365FA19-XN601T-H
SCALE NONE / SIZE A4	SHEET 1 OF 1	REV.	08001